Work Order ID 68431

Wednesday, April 13, 2011 11:00:14 AM

Item ID: D3562-041 **Accept** **Setup Start**

Revision ID:

Item Name: Step Assembly, LH **Stop**

Start Date: 4/13/2011 **Start Qty:** 3.00 **Cust Item ID:**

Required Date: 4/29/2011 **Req'd Qty:** 3.00 **Customer:**

Reference:

Approvals: **Process Plan:** W **Date:** _____ **Tooling:** _____ **Date:** _____ **Run Start**

QC: _____ **Date:** _____ **SPC (Y/N):** _____ **Date:** _____ **Stop**

Sequence ID/ Work Center ID	Operation Description	Set Up/ Run Hours	Tool ID	Tool #	Plan Code	Accept Qty	Reject Qty	Reject Number	Insp. Stamp
Draw Nbr	**Revision Nbr**								
D3562	Rev E								
100		0.00							
Large Fab	Large Fab								
Large Fab	**Memo**	0.00				11.04.14	3	ϕ	
Large Fab	1-Cut D2622 extrusion as per Dwg D3562 2-Deburr and bevel ends for welding								
110	~~QC5~~ QC6 - Inspect part completeness to step on W/O	0.00							
QC	**Memo**	0.00				11.04.14		PTO	
Quality Control									
120	Chemical Conversion Coat per QSI005 4.1	0.00				11.04.15	3	ϕ	
HandFinish	**Memo**	0.00							
Hand Finishing									

Dart Aerospace Ltd

W/O: 68431	WORK ORDER CHANGES						
DATE	STEP	PROCEDURE CHANGE	By	Date	Qty	Approval Chief Eng / Prod Mgr	Approval QC Inspector
14.04.14	110	Change To QC 6	[illegible]	11.04.28			[illegible] 14.04.14

Part No: D3562-041 PAR #: _____ Fault Category: _____ NCR: Yes No DQA: _____ Date: _____

Resolution: _____ Disposition: _____ QA: N/C Closed: _____ Date: _____

NCR:	WORK ORDER NON-CONFORMANCE (NCR)							
DATE	STEP	Description of NC Section A	Corrective Action Section B			Verification Section C	Approval Chief Eng	Approval QC Inspector
			Initial Chief Eng	Action Description Chief Eng	Sign & Date			

NOTE: Date & initial all entries

H:\fFORMS\Quality Assurance\approved QA\NCRWO RevE

Work Order ID 68431

Wednesday, April 13, 2011 11:00:14 AM

Item ID: D3562-041 **Accept** **Setup Start** **Stop**

Revision ID:

Item Name: Step Assembly, LH

Start Date: 4/13/2011 **Start Qty:** 3.00 **Cust Item ID:**

Required Date: 4/29/2011 **Req'd Qty:** 3.00 **Customer:**

Reference:

Run Start **Stop**

Approvals: **Process Plan:** _____ **Date:** _____ **Tooling:** _____ **Date:** _____

QC: _____ **Date:** _____ **SPC (Y/N):** _____ **Date:** _____

Sequence ID/ Work Center ID	Operation Description	Set Up/ Run Hours	Tool ID	Tool #	Plan Code	Accept Qty	Reject Qty	Reject Number	Insp. Stamp
130	QC3- Inspect Part Finish	0.00				3			
QC	Memo	0.00							
Quality Control									
140		0.00							
Small Fab	Small Fab					3			
Small Fab	Memo	0.00							
	1- Transfer drill Rivet holes as per dwg D3562. 2-Touch-up rivet holes with alodine as per dwg d3562 3-Rivet legs using Magnabond as per dwg D3562. ******Ensure to wipe off any exess magnobond ****** A/R Magnabond 6398 Batch: 2114158								
150	QC5- Inspect part completeness to step on W/O	0.00				x3			
QC	Memo	0.00							
Quality Control									

SAD 11-04-16

11·04·18

S 11/04/16

Dart Aerospace Ltd

W/O:		WORK ORDER CHANGES					
DATE	STEP	PROCEDURE CHANGE	By	Date	Qty	Approval Chief Eng / Prod Mgr	Approval QC Inspector

Part No: _____ **PAR #:** _____ **Fault Category:** _____ **NCR:** Yes No **DQA:** _____ **Date:** _____

Resolution: _____ **Disposition:** _____ **QA: N/C Closed:** _____ **Date:** _____

NCR:		WORK ORDER NON-CONFORMANCE (NCR)						
DATE	STEP	Description of NC Section A	Corrective Action Section B			Verification Section C	Approval Chief Eng	Approval QC Inspector
			Initial Chief Eng	Action Description Chief Eng	Sign & Date			

NOTE: Date & initial all entries

H:\fFORMS\Quality Assurance\approved QA\NCRWO RevE

Work Order ID 68431

Wednesday, April 13, 2011 11:00:14 AM

Item ID: D3562-041 **Accept** **Setup Start** **Stop**

Revision ID:

Item Name: Step Assembly, LH

Start Date: 4/13/2011 **Start Qty:** 3.00 **Cust Item ID:**

Required Date: 4/29/2011 **Req'd Qty:** 3.00 **Customer:**

Reference:

Run Start **Stop**

Approvals: **Process Plan:** _____ **Date:** _____ **Tooling:** _____ **Date:** _____

QC: _____ **Date:** _____ **SPC (Y/N):** _____ **Date:** _____

Sequence ID/ Work Center ID	Operation Description	Set Up/ Run Hours	Tool ID	Tool #	Plan Code	Accept Qty	Reject Qty	Reject Number	Insp. Stamp
160 Large Fab Large Fab	Large Fab **Memo** 1-Weld end caps as per Dwg d3562 & QSI 004. Inspect for foreign objects as per QSI 024. A/RAluminum Rod M114703 2-Grind end cap welds flush as per Dwg D3562	0.00 0.00	11·04·22			3	Ø		
170 QC Quality Control	~~QC9-~~ Inspect visual per QSI004- Fusion Welds Q16 **Memo**	0.00 0.00	Sulcylor						Pro→
180 QC Quality Control	QC5- Inspect part completeness to step on W/O **Memo**	0.00 0.00	Sulcylor			3 MC			

Dart Aerospace Ltd

W/O: 68431		WORK ORDER CHANGES					
DATE	STEP	Perm. chang. PROCEDURE CHANGE	By	Date	Qty	Approval Chief Eng / Prod Mgr	Approval QC Inspector
11/04/20	# 170	change step 6 QC10 inspection	[illegible]	11.04.20			[illegible] 11/04/20

Part No: D3562-041 PAR #: _____ Fault Category: _____ NCR: Yes No DQA: _____ Date: _____

Resolution: _____ Disposition: _____ QA: N/C Closed: _____ Date: _____

NCR:		WORK ORDER NON-CONFORMANCE (NCR)						
DATE	STEP	Description of NC Section A	Corrective Action Section B			Verification Section C	Approval Chief Eng	Approval QC Inspector
			Initial Chief Eng	Action Description Chief Eng	Sign & Date			

NOTE: Date & initial all entries

Work Order ID 68431

Wednesday, April 13, 2011 11:00:14 AM

Item ID: D3562-041 **Accept** **Setup Start**

Revision ID: **Stop**

Item Name: Step Assembly, LH

Start Date: 4/13/2011 **Start Qty:** 3.00 **Cust Item ID:**

Required Date: 4/29/2011 **Req'd Qty:** 3.00 **Customer:**

Reference:

Approvals: **Process Plan:** _____ **Date:** _____ **Tooling:** _____ **Date:** _____ **Run Start**

QC: _____ **Date:** _____ **SPC (Y/N):** _____ **Date:** _____ **Stop**

Sequence ID/ Work Center ID	Operation Description	Set Up/ Run Hours	Tool ID	Tool #	Plan Code	Accept Qty	Reject Qty	Reject Number	Insp. Stamp
190	Chemical Conversion Coat per QSI005 4.1	0.00							
HandFinish						3	BR	11-4-25	
Hand Finishing	**Memo**	0.00							
200	White Gloss(Ref:4.3.5.1) per QSI005 4.3-Alum	0.00							
Powdercoat	M116964.					3	BR	11-4-25.	
Powder Coating	**Memo** START TIME: 2:00 OVEN TEMPERATURE: 320° FINISH TIME: 2:30.	0.00							
210	Wing Walk as per dwg QSI005 4.4 Batch M111 73 1 S	0.00							
HandFinish						3 hrl			04/26
Hand Finishing	**Memo**	0.00							

Dart Aerospace Ltd

W/O:		WORK ORDER CHANGES					
DATE	STEP	PROCEDURE CHANGE	By	Date	Qty	Approval Chief Eng / Prod Mgr	Approval QC Inspector

Part No: _____ **PAR #:** _____ **Fault Category:** _____ **NCR:** Yes No **DQA:** _____ **Date:** _____

Resolution: _____ **Disposition:** _____ **QA: N/C Closed:** _____ **Date:** _____

NCR:		WORK ORDER NON-CONFORMANCE (NCR)						
DATE	STEP	Description of NC Section A	Corrective Action Section B			Verification Section C	Approval Chief Eng	Approval QC Inspector
			Initial Chief Eng	Action Description Chief Eng	Sign & Date			

NOTE: Date & initial all entries

H:\fFORMS\Quality Assurance\approved QA\NCRWO RevE

Work Order ID 68431

Wednesday, April 13, 2011 11:00:14 AM

Item ID: D3562-041 **Accept** **Setup Start** **Stop**

Revision ID:

Item Name: Step Assembly, LH

Start Date: 4/13/2011 **Start Qty:** 3.00 **Cust Item ID:**

Required Date: 4/29/2011 **Req'd Qty:** 3.00 **Customer:**

Reference:

Run Start **Stop**

Approvals: **Process Plan:** _____ **Date:** _____ **Tooling:** _____ **Date:** _____

QC: _____ **Date:** _____ **SPC (Y/N):** _____ **Date:** _____

Sequence ID/ Work Center ID	Operation Description	Set Up/ Run Hours	Tool ID	Tool #	Plan Code	Accept Qty	Reject Qty	Reject Number	Insp. Stamp
220	QC3- Inspect Part Finish	0.00							
QC	Memo	0.00							
Quality Control									
230	Pick Kit	0.00							
Packaging	Memo	0.00							
Packaging									
240	QC21- Final Inspection - Work Order Release	0.00							
QC	Memo	0.00							
Quality Control									

11/04/29 (3)

G-A w/o 68432 (3x)

11/04/25

11/4/28

MF 11-04-28

Dart Aerospace Ltd

W/O:		WORK ORDER CHANGES					
DATE	STEP	PROCEDURE CHANGE	By	Date	Qty	Approval Chief Eng / Prod Mgr	Approval QC Inspector

Part No: _____ **PAR #:** _____ **Fault Category:** _____ **NCR:** Yes No **DQA:** _____ **Date:** _____

Resolution: _____ **Disposition:** _____ **QA: N/C Closed:** _____ **Date:** _____

NCR:		WORK ORDER NON-CONFORMANCE (NCR)						
DATE	STEP	Description of NC Section A	Corrective Action Section B			Verification Section C	Approval Chief Eng	Approval QC Inspector
			Initial Chief Eng	Action Description Chief Eng	Sign & Date			

NOTE: Date & initial all entries

H:\fFORMS\Quality Assurance\approved QA\NCRWO RevE

Picklist Print

Wednesday, April 13, 2011 11:00:11 AM

Work Order ID: 68431

Parent Item: D3562-041

Parent Item Name: Step Assembly, LH

Start Date: 4/13/2011 **Required Date:** 4/29/2011

Start Qty: 3.00 **Required Qty:** 3.00

Comments:

IPP Rev:A New Issue 06-11-09 JLM
IPP rev B ECN 987 07.10.09 EC verified by: DD
IPP Rev:C ECN1048 07-12-18 DD verified by:ec
IPP Rev:D 08-07-28 add chemical conversion coat DD verified by:EC

Component Item ID/ Item Name	Replacement Item ID	Mfg/ Purch	Bin Item	Primary Location	Last Location	Route Seq ID	Unit of Measure	Qty on Hand	Qty per Kit	Total Qty	Qty Issued	Date Issued	Status
D2622-120C Step Extrusion		Manufactured	No			100	Each	149.0000	1	3	11·04·16		
				Location			**Loc Qty**		**Loc Code**				
				HALL			20						
					64409		20						
				WA			129						
					46910		2						
					64409		1						
					66970		126			3			
D2734 Step End Plate		Manufactured	No			140	Each	73.0000	2	6	11·04·22		
				Location			**Loc Qty**		**Loc Code**				
				WA015			73						
					66143		73			6			
D3560-041 Arm Weldment		Manufactured	No			140	Each	4.0000	1	3	11·04·16		
				Location			**Loc Qty**		**Loc Code**				
				WA013			4						
					48385		4			3			

Dart Aerospace Ltd

W/O:		WORK ORDER CHANGES					
DATE	STEP	PROCEDURE CHANGE	By	Date	Qty	Approval Chief Eng / Prod Mgr	Approval QC Inspector

Part No: _____ **PAR #:** _____ **Fault Category:** _____ **NCR:** Yes No **DQA:** _____ **Date:** _____

Resolution: _____ **Disposition:** _____ **QA: N/C Closed:** _____ **Date:** _____

NCR:		WORK ORDER NON-CONFORMANCE (NCR)						
DATE	STEP	Description of NC Section A	Corrective Action Section B			Verification Section C	Approval Chief Eng	Approval QC Inspector
			Initial Chief Eng	Action Description Chief Eng	Sign & Date			

NOTE: Date & initial all entries

H:\fFORMS\Quality Assurance\approved QA\NCRWO RevE

Picklist Print

Wednesday, April 13, 2011 11:00:11 AM

Work Order ID: 68431

Parent Item: D3562-041

Parent Item Name: Step Assembly, LH

Start Date: 4/13/2011 **Required Date:** 4/29/2011

Start Qty: 3.00 **Required Qty:** 3.00

D3560-043 Arm Weldment	Manufactured	No	140	Each	3.0000	1	3	11·04·16

Location		Loc Qty	Loc Code	
WA013		3		
	48387	3		3

MS20600-AD4W5 Blind Rivet	Purchased	No	160	Each	535.0000	32	96	11·04·16

Location		Loc Qty	Loc Code	
ST321		379		
	114382	279		
	116289	100		
WA018		156		
	111477	156		96

Dart Aerospace Ltd

W/O:		WORK ORDER CHANGES					
DATE	STEP	PROCEDURE CHANGE	By	Date	Qty	Approval Chief Eng / Prod Mgr	Approval QC Inspector

Part No: _____ **PAR #:** _____ **Fault Category:** _____ **NCR:** Yes No **DQA:** _____ **Date:** _____

Resolution: _____ **Disposition:** _____ **QA: N/C Closed:** _____ **Date:** _____

NCR:		WORK ORDER NON-CONFORMANCE (NCR)						
DATE	STEP	Description of NC Section A	Corrective Action Section B			Verification Section C	Approval Chief Eng	Approval QC Inspector
			Initial Chief Eng	Action Description Chief Eng	Sign & Date			

NOTE: Date & initial all entries

H:\fFORMS\Quality Assurance\approved QA\NCRWO RevE

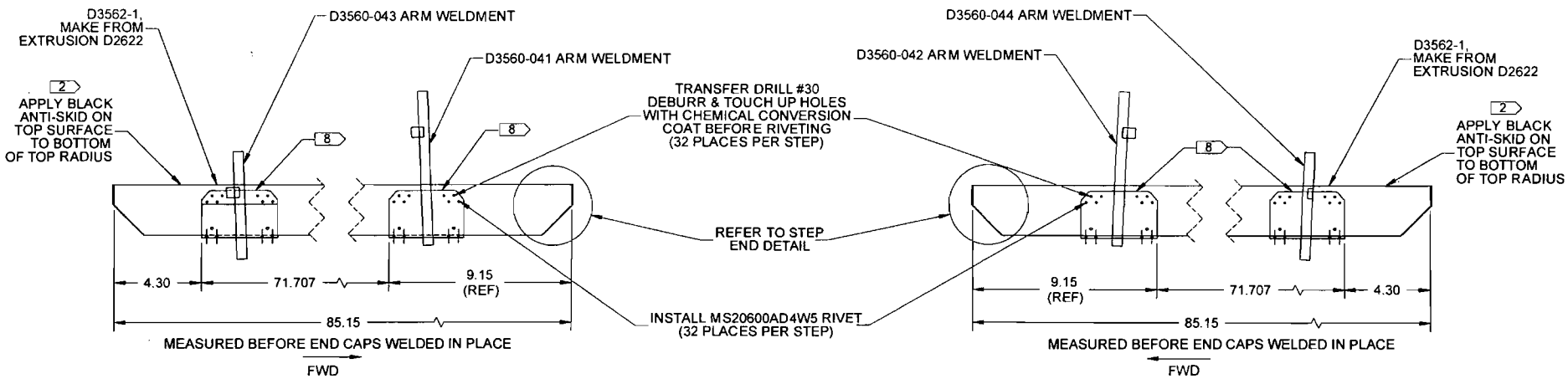

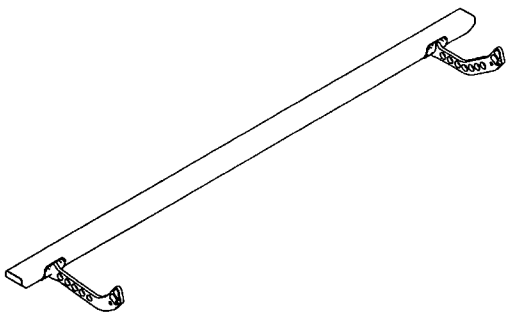

D3562-041 LH STEP ASSEMBLY

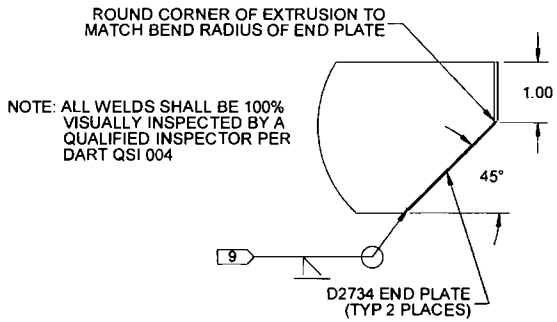

NOTE: ALL WELDS SHALL BE 100% VISUALLY INSPECTED BY A QUALIFIED INSPECTOR PER DART QSI 004

TYPICAL STEP END DETAIL
SCALE 1:2

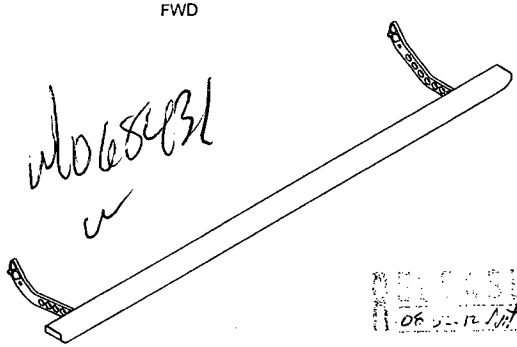

D3562-042 RH STEP ASSEMBLY

NOTES:
1) MATERIAL: N/A
2) FINISH:
   i) CHEMICAL CONVERSION COAT STEP EXTRUSION PER DART QSI 005 4.1 BEFORE ASSEMBLY
   ii) POWDER COAT ASSEMBLY GLOSS WHITE (4.3.5.1) OR GREY SANDTEX (4.3.5.6) OR BLACK SANDTEX (4.3.5.7) OR GREEN SANDTEX (4.3.5.8) PER DART QSI 005 4.3
   iii) BLACK ANTI-SKID PAINT PER DART QSI 005 4.4
3) TOLERANCES: PER DART QSI 018 UNLESS OTHERWISE NOTED
4) UNITS: INCHES UNLESS OTHERWISE NOTED
5) BREAK SHARP EDGES: 0.005 TO 0.010 MAX
6) IDENTIFICATION: NONE
7) WEIGHT: 8.79 lbs
8) INSTALL ARM WELDMENTS WITH A LAYER OF MAGNOBOND 6398 BETWEEN THE ARM WELDMENT AND STEP EXTRUSION. FILL ANY TOOLING HOLES WITH MAGNOBOND 6398. CLEAN OFF EXCESS BEFORE POWDER COATING.
9) WELDING: PER DART QSI 004

QTY -041	QTY -042	P/N	DESCRIPTION
X		D3562-041	LH STEP ASSEMBLY
	X	D3562-042	RH STEP ASSEMBLY
1		D3560-041	ARM WELDMENT
	1	D3560-042	ARM WELDMENT
1		D3560-043	ARM WELDMENT
	1	D3560-044	ARM WELDMENT
32	32	MS20600AD4W5	RIVET
2	2	D2734	END PLATE

E

REV.	DESCRIPTION	BY	DATE
E	ADD QTY (2) TO D2734 END PLATE ON D3562-042	PH	08.01.11
D	REMOVE D2808 SPACER NOTE; REDRAWN IN SOLIDWORKS	DC	07.11.16
C	NOW MAGNOBOND, ADD D2808, REMOVE 4 RIVETS	CP	07.06.19
B	ARMS NOW RIVETED TO STEP	CP	07.01.15
A	NEW ISSUE	CP	06.09.26

DESIGN		**DART AEROSPACE LTD** HAWKESBURY, ONTARIO, CANADA
DRAWN		DRAWING NO. D3562 — REV. E — SHEET 1 OF 1
CHECKED		TITLE: STEP ASSEMBLY — SCALE 1:5
MFG. APPR.		
APPROVED		
DE APPR.		
DATE	08.01.11	

COPYRIGHT © 2006 BY DART AEROSPACE LTD
THIS DOCUMENT IS PRIVATE AND CONFIDENTIAL AND IS SUPPLIED ON THE EXPRESS CONDITION THAT IT IS NOT TO BE USED FOR ANY PURPOSE OR COPIED OR COMMUNICATED TO ANY OTHER PERSON WITHOUT WRITTEN PERMISSION FROM DART AEROSPACE LTD

Dart Aerospace Ltd

W/O:		WORK ORDER CHANGES					
DATE	STEP	PROCEDURE CHANGE	By	Date	Qty	Approval Chief Eng / Prod Mgr	Approval QC Inspector

Part No: _____ PAR #: _____ Fault Category: _____ NCR: Yes No DQA: _____ Date: _____

Resolution: _____ Disposition: _____ QA: N/C Closed: _____ Date: _____

NCR:		WORK ORDER NON-CONFORMANCE (NCR)						
DATE	STEP	Description of NC Section A	Corrective Action Section B			Verification Section C	Approval Chief Eng	Approval QC Inspector
			Initial Chief Eng	Action Description Chief Eng	Sign & Date			

NOTE: Date & initial all entries

H:\fFORMS\Quality Assurance\approved QA\NCRWO RevE